RD40xD User Manual

410-470 MHz Data Transmission Module (Radio)

TRIMTALK/TRIMMARK3/TRANSEOT/DIRECT



成都亿佰特电子科技有限公司
Chengdu Ebyte Electronic Technology Co.,Ltd.

Copyright © 2012-2026, Chengdu Ebyte Electronic Technology Co., Ltd.

Distribuída no Brasil pela LRI | vendas@lri.com.br | 51 2129-3000

Contents

Disclaimer and Copyright Notice 4
1 Product Overview 5
1.1 Introduction 5
1.2 Features 5
1.3 Applications 5
2 Specifications 6
2.1 Model Comparison 6
2.2 Operating Parameters 6
3 Mechanical Dimensions and Pin Definitions 8
3.1 Mechanical Dimensions and Pin Definitions 8
3.2 Indicator 10
4 Recommended Wiring 11
5 Operating Modes 11
5.1 Configuration Mode 11
5.2 Data Transmission Mode 12
6 Commands 12
6.1 Transmit Frequency Configuration 12
6.2 Transmit Frequency Query 12
6.3 Receive Frequency Configuration 13
6.4 Receive Frequency Query 13
6.5 Protocol Configuration 13
6.6 Protocol Query 14
6.7 Air Data Rate Configuration 14
6.8 Air Data Rate Query 14
6.9 Power Mode Configuration 15
6.10 Power Mode Query 15
6.11 Hardware Version Query 15
6.12 Serial Number Query 16
6.13 Software Version Query 16
6.14 Serial Baud Rate Configuration 16
6.15 Serial Baud Rate Query 17
7 Quick Start 17
7.1 Module (Radio) Parameter Configuration 17
7.2 Communication Test 18
8 IAP Online Firmware Upgrade 18
9 Hardware Design 19
10 Troubleshooting 20
10.1 Limited Communication Range 20
10.2 Module Damage 20
10.3 High Bit Error Rate 21
11 Reflow Soldering Guidelines 21
11.1 Reflow Soldering Temperature 21
11.2 Reflow Soldering Profile 22

Copyright © 2012-2026, Chengdu Ebyte Electronic Technology Co., Ltd.

Distribuída no Brasil pela LRI | vendas@lri.com.br | 51 2129-3000

12 Related Models 22
Revision History 23
About Us 23

Copyright © 2012-2026, Chengdu Ebyte Electronic Technology Co., Ltd.

Distribuída no Brasil pela LRI | vendas@lri.com.br | 51 2129-3000

Disclaimer and Copyright Notice

The information in this document, including any referenced URLs, is subject to change without notice. This document is provided "as is" without warranties of any kind, including warranties of merchantability, fitness for a particular purpose, non-infringement, or any warranty arising from a proposal, specification, or sample. Ebyte assumes no liability for any patent infringement resulting from the use of the information in this document. No license to any intellectual property right is granted by estoppel or otherwise, whether express or implied.

All test data in this document were obtained in Ebyte laboratories. Actual results may vary slightly.

All trade names, trademarks, and registered trademarks mentioned in this document are the property of their respective owners.

This product must not be used in military or life-safety applications. The user assumes all responsibility for any prohibited use.

Chengdu Ebyte Electronic Technology Co., Ltd. reserves the right of final interpretation.

Notice:

This manual may be revised following product upgrades or for other reasons. Chengdu Ebyte Electronic Technology Co., Ltd. reserves the right to modify its contents without prior notice. This manual is provided only as a user guide. Although every effort has been made to ensure accuracy, Ebyte does not guarantee that the manual is error-free. No statement, information, or recommendation in this manual constitutes an express or implied warranty.

Copyright © 2012-2026, Chengdu Ebyte Electronic Technology Co., Ltd.

Distribuída no Brasil pela LRI | vendas@lri.com.br | 51 2129-3000

1 Product Overview

1.1 Introduction

The RD40xD is a fixed-frequency data transceiver module (radio) designed by Ebyte for operation in the 410-470 MHz band. It is intended for surveying and mapping, precision agriculture, unmanned aerial vehicles, and Internet of Things applications. The module is lightweight and compact, consumes little power, and provides high receive sensitivity. It offers selectable transmit power, configurable air data rates, a wide range of serial baud rates, and simple operation. It supports major industry protocols, including TRIMTALK, TRIMMARK3, TRANSEOT (also known as PCC or transparent protocol), and DIRECT.

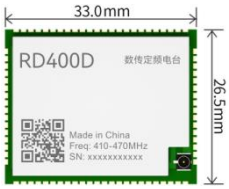

RD400D

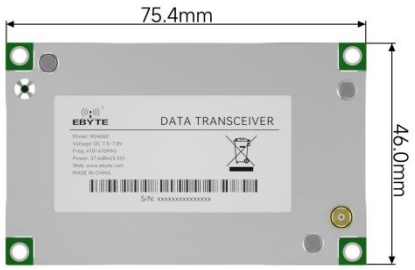

RD406D

1.2 Features

- Maximum transmit power: 37.4 dBm;
- Built-in 32/40 MHz temperature-compensated crystal oscillator;
- Supports the 410-470 MHz frequency band;
- Air data rates of 4,800, 9,600, and 19,200 bps;
- Selectable serial baud rates: 9,600, 19,200, 38,400, 57,600, and 115,200 bps (default);
- RD406D supports dual-mode UHF and LoRa communication;
- Supports online firmware upgrades through serial IAP;
- Communication range up to 10 km;
- Compatible with multiple industry data protocols, including TRIMTALK, TRIMMARK3, TRANSEOT (also known as PCC or transparent protocol), and DIRECT;
- Supports point-to-point and point-to-multipoint communication;
- Built-in watchdog and hardware reset functions prevent system lockups;
- Industrial-grade design for continuous operation from -40 to +85 °C;

1.3 Applications

- Surveying, mapping, and precision agriculture;
- Unmanned aerial vehicles;
- Internet of Things applications;
- Driver testing and training.

Copyright © 2012-2026, Chengdu Ebyte Electronic Technology Co., Ltd.

Distribuída no Brasil pela LRI | vendas@lri.com.br | 51 2129-3000

2 Specifications

2.1 Model Comparison

Model	Carrier Frequency① (MHz)	Protocol	Tx Power② (dBm)	Range③ (km)	Dimensions④ (mm)	Package	Antenna⑤
RD400D	410~470	TRIMTALK TRIMMARK3 TRANSEOT	30	5.6	33*26.5*3.7	SMD	IPEX Generation 1
RD406D	410~470	TRIMTALK TRIMMARK3 TRANSEOT DIRECT	37.4	10	75.4*46.0*11.3	DIP	MCX Female

Notes:

① Communication channel: user-programmable within the supported channel range;

② Transmit power: adjustable over multiple levels;

③ Communication range: measured in clear, open conditions with antennas mounted 2 m above ground and an air data rate of 9,600 bps. Values are for reference only; field testing is recommended;

④ Dimensions: tolerance ±0.2 mm;

⑤ Antenna connector: nominal impedance approximately 50 Ω.

2.2 Operating Parameters

Parameter		RD400D	RD406D	Remarks
Operating Voltage (V)		3.3~3.6	7.5~7.8	Exceeding the maximum operating voltage may damage the module
Communication Logic Level (V)		3.3	3.3	-
Modulation		GMSK/4FSK	LoRa/GMSK/4FSK	-
Protocol		GMSK/4FSK mode: TRIMTALK, TRANSEOT, and TRIMMARK3 and other transmission protocols	GMSK/4FSK mode: TRIMTALK, TRANSEOT, and TRIMMARK3 and other transmission protocols LoRa mode: DIRECT	-
Operating Frequency (MHz)		410~470	410~470	-
Transmit Power (dBm)	High power	30	37.4	-
	Low power	27	30	-
Receive Sensitivity (dBm)		-115	-120	-

Copyright © 2012-2026, Chengdu Ebyte Electronic Technology Co., Ltd.

Distribuída no Brasil pela LRI | vendas@lri.com.br | 51 2129-3000

Transmit Current (mA)	1066	1900	-
Receive Current (mA)	50	50	-
Communication Interface	UART	UART	-
Connector Type	Postal stamp hole	2 × 8-pin header with 1.27 mm pitch	-
Weight	4.8g±0.1g	63.5g ±0.5g	-
Operating Temperature	-40℃~+85℃		Industrial grade
Operating Humidity	10~95%RH		No condensation
Storage Temperature	-40℃～+125℃		-

Transmitter Specifications		
Parameter	**Description**	**Remarks**
RF Power Stability	±1dB	-
Adjacent-Channel Power	>50dB	-
Second Harmonic	<-25dBm	-
Receiver Specifications		
Parameter	**Description**	**Remarks**
Co-channel Rejection	>-12dB	-
Adjacent-Channel Selectivity	>50dB@25KHz	-
Spurious Response Rejection	>50dB	-
Air Data Rate	4800bps、9600bps、19200bps	TRIMTALK supports 4,800 and 9,600 bps; TRIMMARK3 supports 19,200 bps; TRANSEOT supports 4,800 and 9,600 bps; DIRECT supports 9,600 bps.

Parameter		**Description**	**Remarks**
Data Rate	TRIMTALK	950 bytes/s	@ serial baud rate 115,200 and air data rate 9,600
	TRIMMARK3	1300 bytes/（750ms）	@ serial baud rate 115,200 and air data rate 19,200
	TRANSEOT	600 bytes/s	@ serial baud rate 115,200 and air data rate 9,600
	DIRECT	580 bytes/s	@ serial baud rate 115,200 and air data rate 9,600
Frequency Stability		≤±1.0ppm	-
Operating Mode		Half-duplex	-

Copyright © 2012-2026, Chengdu Ebyte Electronic Technology Co., Ltd.

Distribuída no Brasil pela LRI | vendas@lri.com.br | 51 2129-3000

3 Mechanical Dimensions and Pin Definitions

3.1 Mechanical Dimensions and Pin Definitions

RD400D:

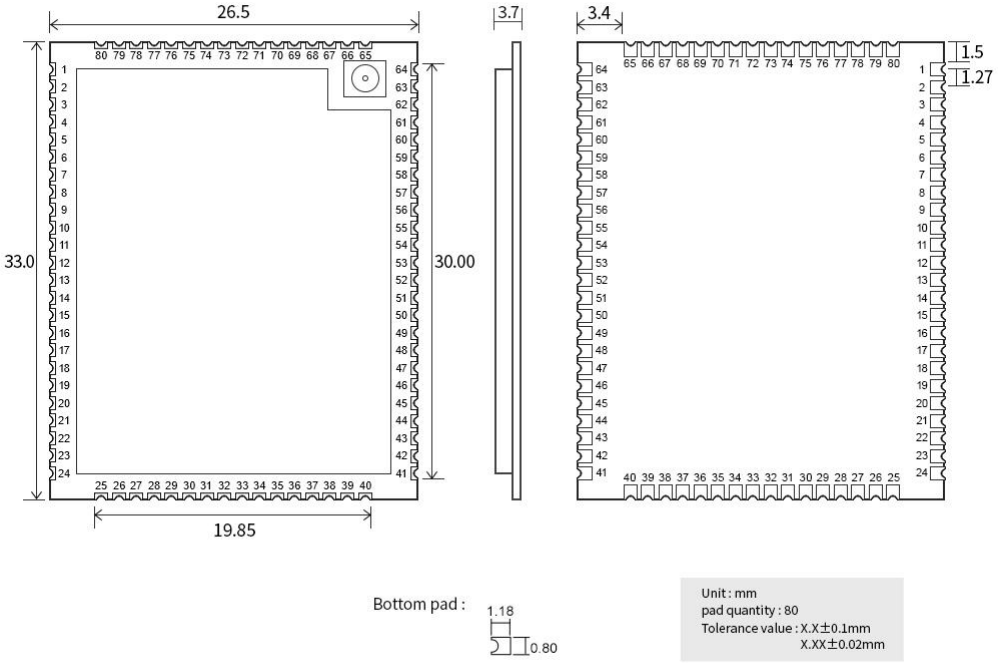

Pin No.	Pin Name	Input/Output	Function
1	GND	Input/Output	Ground
2	RSSI	Output	Analog voltage output indicating received signal strength. Output range: 0.5-2.5 V. A higher voltage indicates a stronger received signal.
3-6	NC	Input	Leave unconnected (for internal testing)
7-9	NC	NC	-
10-13	I/O	Input/Output	Reserved
14-16	NC	NC	-
17	GND	Input/Output	Ground
18-19	NC	NC	-
20-24	I/O	Reserved	Reserved
25-26	GND	Input/Output	Ground
27	NC	NC	-
28	RXD	Input	Serial receive input
29	TXD	Output	Serial transmit output
30-36	NC	NC	-

Copyright © 2012-2026, Chengdu Ebyte Electronic Technology Co., Ltd.

Distribuída no Brasil pela LRI | vendas@lri.com.br | 51 2129-3000

37-38	NC	Input	Reserved
39-41	GND	Input/Output	Ground
42-44	NC	NC	-
45	RST	Input	Module reset pin, active low
46	CONFIG	Input	Module parameter configuration mode control pin. A low level enables configuration mode; a high level exits configuration mode
47-61	NC	NC	-
62-64	VCC	Input	Power input (3.3-3.6 V). Pins 62, 63, and 64 must all be connected during use.
65-67	GND	Input/Output	Ground
68-77	NC	NC	-
78-80	GND	Input/Output	Ground

RD406D:

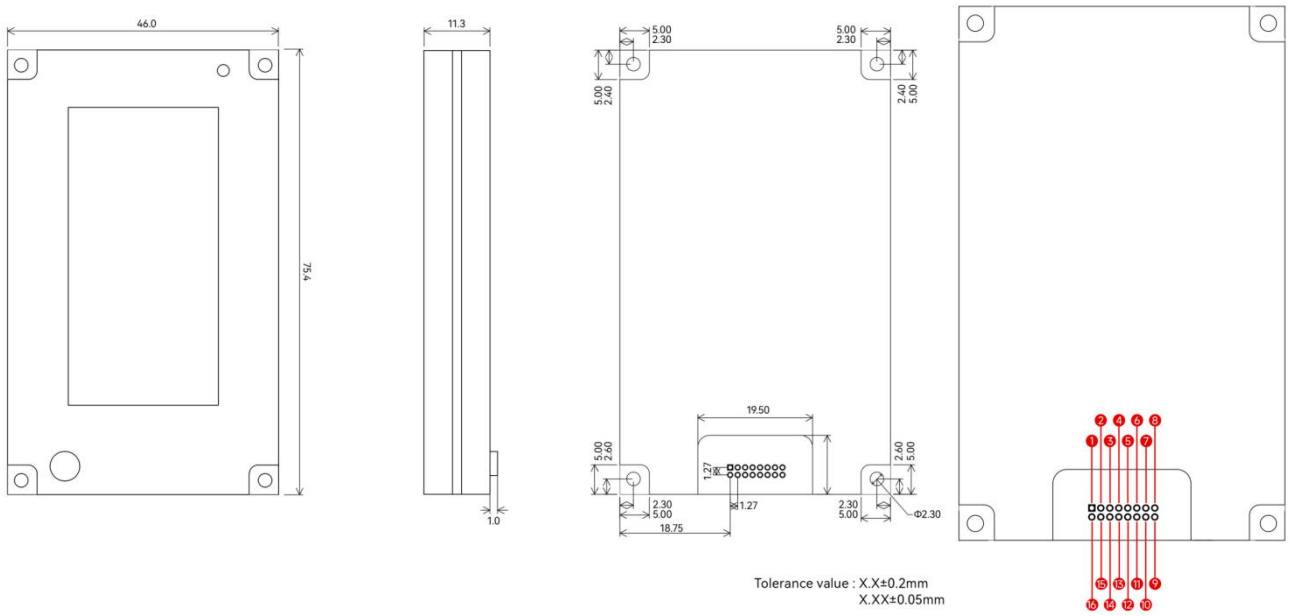

Pin No.	Pin Name	Input/Output	Function
1	VCC	Input	+7.5 V DC power input
2	VCC	Input	+7.5 V DC power input
3	VCC	Input	+7.5 V DC power input
4	VCC	Input	+7.5 V DC power input
5	RSSI	Output	Signal-strength voltage output (analog)
6	NC	NC	Leave unconnected. Do not connect.
7	TXD	Output	TTL serial data output
8	RXD	Input	TTL serial data input
9	CONFIG	Input	Low level: configuration mode; high level: data transmission mode
10	NC	NC	Leave unconnected. Do not connect.

Copyright © 2012-2026, Chengdu Ebyte Electronic Technology Co., Ltd.

Distribuída no Brasil pela LRI | vendas@lri.com.br | 51 2129-3000

11	NC	NC	Leave unconnected. Do not connect.
12	NC	NC	Leave unconnected. Do not connect.
13	GND	Input/Output	Ground
14	GND	Input/Output	Ground
15	GND	Input/Output	Ground
16	GND	Input/Output	Ground

3.2 Indicator



Definition	Function	Remarks
LED	Data transmit/receive indicator	The red indicator flashes while data are transmitted; the green indicator flashes while data are received.

Copyright © 2012-2026, Chengdu Ebyte Electronic Technology Co., Ltd.

Distribuída no Brasil pela LRI | vendas@lri.com.br | 51 2129-3000

4 Recommended Wiring

RD400D:

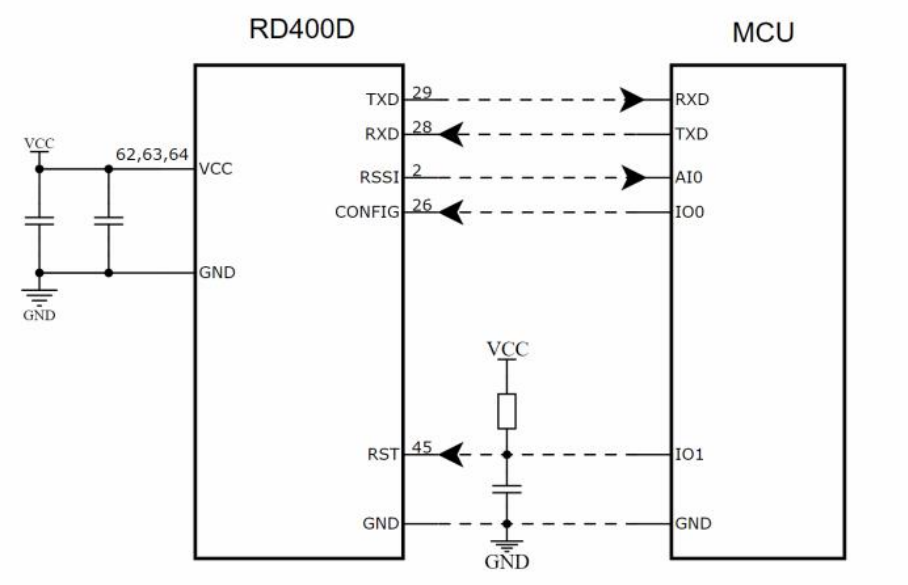

RD406D:

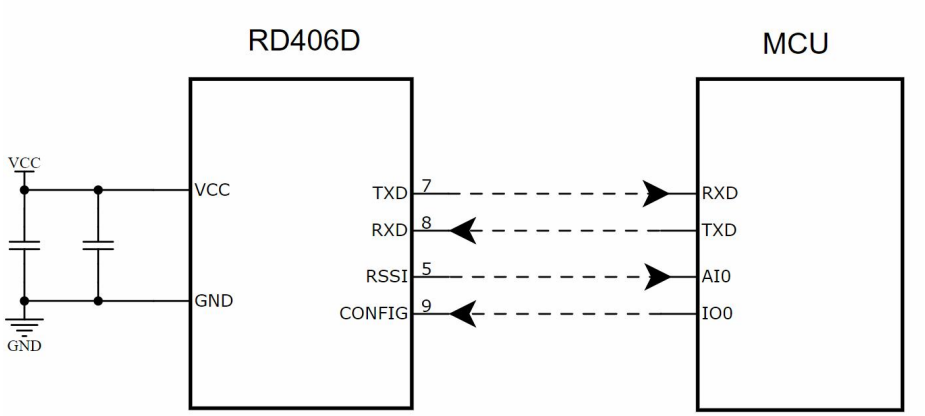

5 Operating Modes

5.1 Configuration Mode

Drive the CONFIG pin low (connect it to GND) to place the module (radio) in configuration mode. The module parameters can then be configured.

Copyright © 2012-2026, Chengdu Ebyte Electronic Technology Co., Ltd.

Distribuída no Brasil pela LRI | vendas@lri.com.br | 51 2129-3000

5.2 Data Transmission Mode

Drive the CONFIG pin high (connect it to 3.3 V) to exit parameter configuration mode and enter data transmission mode. In this mode, the module (radio) can transmit and receive data.

6 Commands

Notes:

- **The module (radio) must be in configuration mode when a command is sent.**
- **Each command must end with a carriage return and line feed.**
- **Separate a command and its parameter with one space.**
- **Factory-default module (radio) parameters:**

Protocol	Transmit Frequency	Receive Frequency	Air Data Rate	Power Mode	Serial Baud Rate
TRIMTALK	450.500	450.500	9600	H	115200

6.1 Transmit Frequency Configuration

Command	Description
TX XXX.XXX	XXX.XXX is the frequency parameter, where 410.000 ≤ XXX.XXX < 470.000, in MHz.
Returns PROGRAMMED OK > Meaning: the transmit frequency was configured successfully. Example: Send TX 463.125 Returns PROGRAMMED OK > The module (radio) transmit frequency is set to 463.125 MHz.	

6.2 Transmit Frequency Query

Command	Description
TX	Send the command "TX" to query the module's current transmit frequency.
Returns TX XXX.XXX00 MHz > Meaning: "XXX.XXX00 MHz" is the current transmit frequency. Example: Send TX Returns TX 463.12500 MHz	

Copyright © 2012-2026, Chengdu Ebyte Electronic Technology Co., Ltd.

Distribuída no Brasil pela LRI | vendas@lri.com.br | 51 2129-3000

>   The module (radio) transmit frequency is 463.12500 MHz.

6.3 Receive Frequency Configuration

Command	Description
RX XXX.XXX	XXX.XXX is the frequency parameter, where 410.000 ≤ XXX.XXX < 470.000, in MHz.
Returns PROGRAMMED OK > Meaning: the receive frequency was configured successfully. Example: Send RX 463.125 Returns PROGRAMMED OK > The module (radio) receive frequency is set to 463.125 MHz.	

6.4 Receive Frequency Query

Command	Description
RX	Send the command "RX" to query the module's current receive frequency.
Returns RX XXX.XXX00 MHz > Meaning: "XXX.XXX00 MHz" is the current receive frequency. Example: Send RX Returns RX 463.12500 MHz > The module (radio) receive frequency is 463.12500 MHz.	

6.5 Protocol Configuration

Command	Description
PRT XXX	XXX is the communication protocol. The currently supported protocols are: TRIMTALK, TRIMMK3, TRANSEOT, DIRECT, and others.
Returns PROGRAMMED OK > Meaning: configuration was successful. Example: Send PRT TRIMTALK Returns PROGRAMMED OK	

Copyright © 2012-2026, Chengdu Ebyte Electronic Technology Co., Ltd.

Distribuída no Brasil pela LRI | vendas@lri.com.br | 51 2129-3000

>   The communication protocol was configured successfully.

6.6 Protocol Query

Command	Description
PRT	Queries the communication protocol currently used by the module (radio).
Returns PRT XXX > Meaning: "XXX" is the communication protocol. Example: Send PRT Returns PRT TRIMTALK > The module (radio) uses the TRIMTALK protocol.	

6.7 Air Data Rate Configuration

Command	Description
BAUD XXX	XXX is the air data rate. The supported rate depends on the protocol: TRIMTALK supports 4,800 and 9,600 bps; TRIMMARK3 supports 19,200 bps; TRANSEOT supports 4,800 and 9,600 bps; and DIRECT supports 9,600 bps.
Returns PROGRAMMED OK > Meaning: the air data rate was configured successfully. Send BAUD 9600 Returns PROGRAMMED OK > The module (radio) air data rate is set to 9,600 bps.	

6.8 Air Data Rate Query

Command	Description
BAUD	Queries the module's current air data rate.
Returns BAUD XXX > Meaning: "XXX" is the air data rate. Example: Send BAUD Returns BAUD 9600	

Copyright © 2012-2026, Chengdu Ebyte Electronic Technology Co., Ltd.

Distribuída no Brasil pela LRI | vendas@lri.com.br | 51 2129-3000

>   The module (radio) air data rate is 9,600 bps.

6.9 Power Mode Configuration

Command	Description
PWR XXX	XXX is the transmit power mode. Two modes are supported: H and L. H selects high-power mode, and L selects low-power mode.
Returns PROGRAMMED OK > Meaning: this response indicates that configuration was successful. Example: Send PWR H Returns PROGRAMMED OK > The power mode was configured successfully.	

6.10 Power Mode Query

Command	Description
PWR	Queries the module's current power mode.
Returns PWR XXX > Meaning: "XXX" is the power mode. Example: send PWR Returns PWR H > The module (radio) is operating in high-power mode.	

6.11 Hardware Version Query

Command	Description
HVER	Queries the module's current hardware version.

Copyright © 2012-2026, Chengdu Ebyte Electronic Technology Co., Ltd.

Distribuída no Brasil pela LRI | vendas@lri.com.br | 51 2129-3000

Returns HVER XXX > Meaning: "XXX" is the version number. Example: Send HVER Returns HVER V0R1 > The current hardware version is V0R1.

6.12 Serial Number Query

Command	Description
SER	Queries the module (radio) serial number.
Returns SN:XXXXXXX > Meaning: "XXXXXXX" is the 14-character serial number. Example: Send SER Returns SN:S3200291S00009 > The module (radio) serial number is S3200291S00009.	

6.13 Software Version Query

Command	Description
SREV	Queries the module's current software version.
Returns SREV XXXX.XX.XX > Meaning: "XXXX.XX.XX" identifies the version number. Example: Send SREV Returns SREV A001.02.01 > The current software version is A001.02.01.	

6.14 Serial Baud Rate Configuration

Command	Description
SBAUD XXX	XXX is the serial baud rate. The following serial baud rates are supported: 9600,19200,38400,57600,115200

Copyright © 2012-2026, Chengdu Ebyte Electronic Technology Co., Ltd.

Distribuída no Brasil pela LRI | vendas@lri.com.br | 51 2129-3000

Returns PROGRAMMED OK > Example: send SBAUD 115200 Returns PROGRAMMED OK > The serial baud rate was configured successfully.

6.15 Serial Baud Rate Query

Command	Description
SBAUD	Queries the module's current serial baud rate.
Returns SBAUD XXX > Meaning: "XXX" is the serial baud rate. Example: Send SBAUD Returns SBAUD 115200 > The module (radio) serial baud rate is 115,200 bps.	

7 Quick Start

This example uses two RD40xD modules. For clarity, RD40xD module 1 is called module (radio) A, and RD40xD module 2 is called module (radio) B.

Notes:

① The module (radio) supports half-duplex communication only; the two modules cannot transmit data simultaneously;

② The module (radio) must operate in data transmission mode;

Note: after startup, the module (radio) outputs the message "into boot". If this message is not received, check that the serial connection is correct.

7.1 Module (Radio) Parameter Configuration

Configure modules (radios) A and B with the same parameters, as shown below:

Module	Protocol	Transmit Frequency	Receive Frequency	Air Data Rate	Power Mode	Serial Baud Rate
Module (Radio) A	TRIMTALK	463.125	463.125	9600	L	115200
Module (Radio) B	TRIMTALK	463.125	463.125	9600	L	115200

Copyright © 2012-2026, Chengdu Ebyte Electronic Technology Co., Ltd.

Distribuída no Brasil pela LRI | vendas@lri.com.br | 51 2129-3000

7.2 Communication Test

Set modules (radios) A and B to data transmission mode and connect both modules to a serial debugging tool. Send data in both directions. The received data for modules A and B are shown below:



Data Transmission and Reception Example

8 IAP Online Firmware Upgrade

IAP (In-Application Programming) enables the module firmware to be upgraded online through the serial interface.

- **Upgrade Using the PC Tool**

1、Drive the CONFIG pin high (connect it to 3.3 V) to exit parameter configuration mode and enter data transmission mode;

2、Open the "Radio Upgrade Tool" downloaded from the official website, select the serial port, and click Open Port;



3、Click Open File, select the firmware .DWN file, and then click Start Update;

Copyright © 2012-2026, Chengdu Ebyte Electronic Technology Co., Ltd.

Distribuída no Brasil pela LRI | vendas@lri.com.br | 51 2129-3000



4、Click OK after confirming that the serial port parameters are correct;

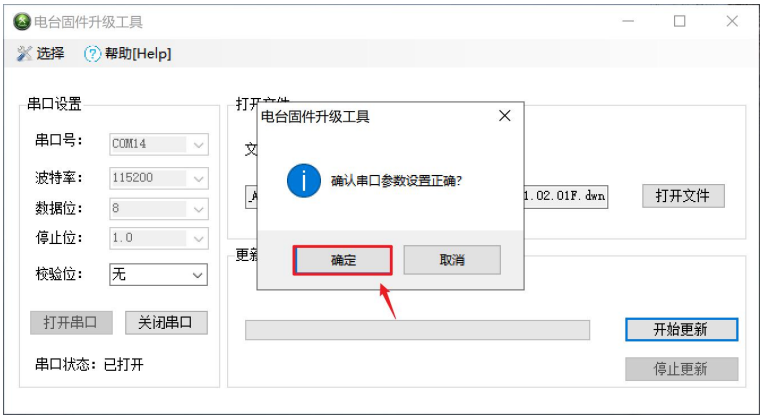

5、When the firmware upgrade is complete, click OK to finish.

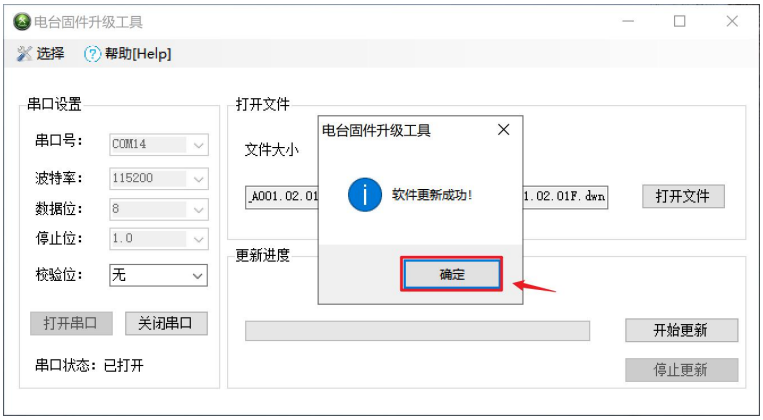

9 Hardware Design

- Use a regulated DC power supply with low ripple, and ensure that the module is properly grounded;
- Connect the positive and negative supply terminals correctly. Reverse polarity may permanently damage the module;
- Check that the supply voltage is within the recommended range. A voltage above the maximum rating may permanently damage the module;
- Use a stable power supply and avoid large or frequent voltage fluctuations;

Copyright © 2012-2026, Chengdu Ebyte Electronic Technology Co., Ltd.

Distribuída no Brasil pela LRI | vendas@lri.com.br | 51 2129-3000

- When designing the module power circuit, allow at least 30% current margin to support stable long-term operation of the complete system;
- Keep the module away from power supplies, transformers, high-frequency traces, and other strong sources of electromagnetic interference;
- Do not route high-frequency digital traces, high-frequency analog traces, or power traces beneath the module. If routing beneath the module is unavoidable and the module is mounted on the top layer, place a continuous, well-grounded copper plane under the module on the top layer, close to the digital section, and route the traces on the bottom layer;
- If the module is mounted on the top layer, arbitrary routing on the bottom or other layers is also unsuitable because it can affect spurious emissions and receive sensitivity;
- Components that produce strong electromagnetic interference can greatly reduce module performance. Keep such components at an appropriate distance according to the interference level and, where possible, provide isolation or shielding;
- Traces that produce strong electromagnetic interference, including high-frequency digital, high-frequency analog, and power traces, can also greatly reduce module performance. Keep them at an appropriate distance according to the interference level and, where possible, provide isolation or shielding;
- If the communication lines use 5 V logic, connect a 1-5.1 kΩ resistor in series. This arrangement is not recommended and still carries a risk of damage;
- Antenna installation has a major effect on module performance. Keep the antenna exposed and preferably vertical. If the module is installed inside an enclosure, use a high-quality extension cable to place the antenna outside the enclosure;
- Never install the antenna inside a metal enclosure, because this will greatly reduce communication range.

10 Troubleshooting

10.1 Limited Communication Range

- Obstacles in the direct communication path reduce the communication range;
- Temperature, humidity, and co-channel interference increase the packet-loss rate;
- The ground absorbs and reflects radio waves, so tests performed close to the ground give poorer results;
- Seawater strongly absorbs radio waves, so tests near the sea give poorer results;
- Metal objects near the antenna, or a metal enclosure around it, cause severe signal attenuation;
- An incorrect power setting or an excessively high air data rate reduces the range. Higher air data rates provide shorter range;
- At room temperature, a supply voltage below the recommended value reduces transmit power; lower voltage produces lower power;
- The antenna may be poorly matched to the module or may be of insufficient quality.

10.2 Module Damage

- Check that the supply voltage is within the recommended range. A voltage above the maximum rating may permanently damage the module;
- Use a stable power supply and avoid large or frequent voltage fluctuations;
- Use electrostatic-discharge protection during installation and operation because high-frequency devices are sensitive to static electricity;

Copyright © 2012-2026, Chengdu Ebyte Electronic Technology Co., Ltd.

Distribuída no Brasil pela LRI | vendas@lri.com.br | 51 2129-3000

- Avoid excessive humidity during installation and operation because some components are moisture-sensitive;
- Unless required, avoid operation at extremely high or low temperatures.

10.3 High Bit Error Rate

- A nearby co-channel signal may cause interference. Move away from the interference source or change the frequency or channel;
- An unstable or unsuitable power supply may corrupt data. Use a reliable power supply;
- A poor-quality or excessively long extension cable or feed line may also increase the bit error rate.

11 Reflow Soldering Guidelines

11.1 Reflow Soldering Temperature

During reflow soldering, all temperatures refer to the temperature at the center of the package body, measured on the upper surface with the leads facing downward (live-bug orientation). If the module temperature is measured with the leads facing upward (dead-bug orientation), the measured peak package temperature Tp must remain within ±2 °C of the value measured in the live-bug orientation to satisfy the Tc requirement. Otherwise, adjust the temperature profile to meet the Tc requirement. For accurate measurement of the actual peak package-body temperature, use the method recommended in JEP140 when profiling the reflow oven.

For best soldering results, maintain the production area at a constant temperature of 25 °C.

When a temperature profile must be reset, use a carrier fixture of the same construction or one verified to provide an equivalent thermal load during reflow.

The reflow profile in this document provides recommendations for soldering Ebyte modules alone and does not validate the user's assembly profile. Develop the actual production profile according to the manufacturing process and PCB design, and do not exceed the parameters in the following table.

Reflow Profile Feature		Sn-Pb Assembly	Pb-Free Assembly
Preheat/Soak	Minimum Temperature (Tsmin)	100℃	150℃
	Maximum Temperature (Tsmax)	150℃	200℃
	Time (Tsmin to Tsmax)	60-120 s	60-120 s
Ramp-Up Rate (TL to Tp)		3 °C/s maximum	3 °C/s maximum
Liquidus Temperature (TL)		183℃	217℃
Time Maintained Above TL		60-90 s	60-90 s
Peak Package Temperature Tp		The user must not exceed the temperature specified on the product moisture-sensitivity label.	The user must not exceed the temperature specified on the product moisture-sensitivity label.
Time Within 5 °C of the Specified Classification Temperature (Tc) (Tp), as shown below		20 s	30 s
Ramp-Down Rate (Tp to TL)		6 °C/s maximum	6 °C/s maximum
Time from Room Temperature to Peak		6 min maximum	8 min maximum

Copyright © 2012-2026, Chengdu Ebyte Electronic Technology Co., Ltd.

Distribuída no Brasil pela LRI | vendas@lri.com.br | 51 2129-3000

Temperature		
※ The tolerance for the peak profile temperature (Tp) is defined as an upper limit for the user.		

11.2 Reflow Soldering Profile

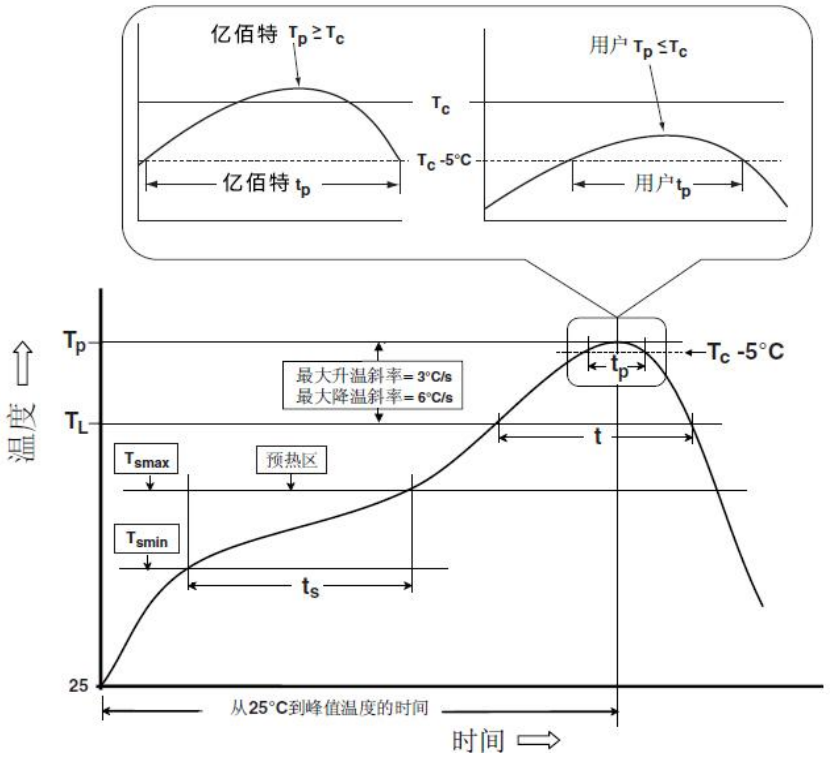

12 Related Models

Model	Chipset	Carrier Frequency Hz	Transmit Power dBm	Dimensions mm	Package	Antenna Connector
E610-433T20S	-	410～441M	20	16*26	SMD	IPX
E610-433T30S	-	410～441M	30	25*40.5	SMD	Castellated Holes/IPEX

Copyright © 2012-2026, Chengdu Ebyte Electronic Technology Co., Ltd.

Distribuída no Brasil pela LRI | vendas@lri.com.br | 51 2129-3000

Revision History

Version	Date	Description	Maintainer
1.0	2023-03-22	Initial version	Bin
1.1	2023-05-22	Corrections	Bin
1.2	2026-09-18	Added RD406D	Bin

About Us

Hotline:4000-330-990

Technical support: service@cdebyte.com

Documents and RF Setting download link: https://www.cdebyte.com

Thank you for using Ebyte products! Please contact us with any questions or suggestions: info@cdebyte.com

Address: B5 Mould Park, 199# Xiqu Ave, High-tech District, Sichuan, China

Chengdu Ebyte Electronic Technology Co.,Ltd.

Copyright © 2012-2026, Chengdu Ebyte Electronic Technology Co., Ltd.

Distribuída no Brasil pela LRI | vendas@lri.com.br | 51 2129-3000